# Drive Pro

## with Quick-Link™ and Hands-Free Plowing™

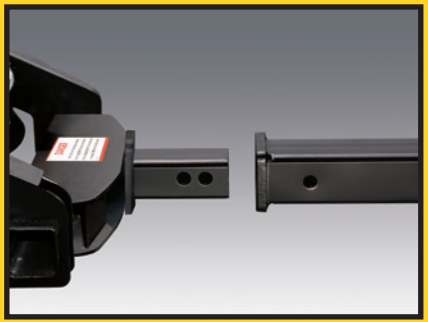

For use with Drive Pro moldboards

**Operation and Maintenance Manual**

# Thank you...

Thank you for buying your Meyer Plow. As a new owner of hard-working, mechanical equipment, we strongly urge you to spend quality time with this owner's manual. It's easy to use and full of time-saving tips that will enhance your ownership experience. It includes suggestions for faster installation, safe operation and more productive plowing.

We also strongly urge you to register your new Meyer plow at meyerproducts.com. Registering will only take minutes and the benefits of doing so will last for years. When registered, you will receive timely and accurate communication on operation tips, maintenance, new products, and service bulletins.

And in the unlikely event you need warranty work done, your local servicing dealer will be able to process your claim faster.

Thanks again for your business. You can now look forward to many years of reliable performance and keeping your driveway safer and easier to use. If you have any questions about your Meyer plow, contact us at: www.meyerproducts.com or call 216-486-1313.

Andrew L. Outcalt
*President, Meyer Products*

# STEP UP TO A 5-YEAR WARRANTY

When you purchase and register* any Meyer snow plow, it will be covered for a full five years. If you do not register the plow, it will be covered for two years.

** Must register your complete plow system online to activate 5 year warranty.*

# Registration Data Sheet

Register your snowplow at www.meyerproducts.com

Owner Name _____

Address _____

City _____

State/Province _____ Zip/Postal Code _____

Purchased From Company Name_____

Contact Name _____

Address _____

City _____

State/Province _____ Zip/Postal Code _____

Phone Number _____

Date Purchased_____

Vehicle Make _____ Vehicle Model _____

Vehicle Year _____ Vehicle Model _____

Hydraulic Motor Serial Number _____

Moldboard Serial Number _____

Type of Mount _____

# Table of Contents


Safety Definitions & Warnings ..... 2-3
Introduction ..... 4
EC Declaration of Conformity ..... 5
Drive Pro Component Identification..... 6
Controller Operation ..... 8-9
Drive Pro 2" Receiver Mounting System – Dismount/OFF ..... 10
Drive Pro 2" Receiverounting System – Mount/ON..... 11
Hydraulic Component Identification ..... 12
Hydraulic Testing Tips/Trouble Shooting ..... 13-15
General Maintenance..... 16-18
Pre-Season & Post-Season Maintenance ..... 19-21
Snow Plow Storage..... 22
Warranty/Contact Meyer..... 23-24

# Safety Definitions & Warnings

### SAFETY DEFINITIONS

This is the safety alert symbol. It is used to alert you to potential personal injury hazards. Obey all safety messages that follow this symbol to avoid possible injury or death.

**⚠ DANGER**

**DANGER** Indicates an imminently hazardous situation which, if not avoided, will result in death or serious injury.

**⚠ WARNING**

**WARNING** Indicates a potentially hazardous situation which, if not avoided, could result in death or serious injury.

**⚠ CAUTION**

**CAUTION** Indicates an potentially hazardous situation which, if not avoided, may result in minor or moderate injury.

**CAUTION**

**CAUTION** used without the safety alert symbol indicates a potentially hazardous situation which, if not avoided, will result in property damage.

| | | |
|---|---|---|
| 1 | ⚠ DANGER | *Never stand or ride on the plow assembly. Keep people and pets at least 25 feet away from the snow plow when in operation. Failure to comply will result in death or serious injury.* |
| 2 | ⚠ WARNING | *Always lower moldboard to the ground when snow plow is being serviced or when vehicle is not in use. Failure to comply could result in death or serious injury.* |
| 3 | ⚠ WARNING | **NEVER** *use the Meyer plow without first CAREFULLY reading the Owner's Manual. It is CRITICAL for your safety to ALWAYS obey EVERY warning in the manual and follow EVERY instruction EXPLICITLY. Failure to comply could result in death or serious injury.* |
| 4 | ⚠ WARNING | *The Meyer plow should be used by drivers with a valid operator's license. Keep all body parts inside the vehicle. Failure to comply could result in death or serious injury.* |
| 5 | ⚠ WARNING | *The Meyer plow should NEVER be used for ANY other purpose other than plowing snow, using the Meyer plow for other purposes could result in serious injury or death.* |
| 6 | ⚠ WARNING | *Inspect plow assembly and mounting components and fasteners for wear and damage before and after each use. Worn or damaged components or fasteners could allow the plow to drop unexpectedly. Failure to comply could result in death or serious injury.* |
| 7 | ⚠ WARNING | *Do not change plow position while traveling. You could suddenly lower the plow accidentally. Failure to comply could result in death or serious injury.* |
| 8 | ⚠ WARNING | *ALWAYS wear a seat belt when plowing snow. Hidden obstructions can cause the vehicle to stop suddenly resulting in personal injury. Failure to comply could result in death or serious injury.* |
| 9 | ⚠ WARNING | *Do not mix different kinds of hydraulic fluid. Some fluids are not compatible and may cause performance problems and product damage Failure to comply could result in death or serious injury.* |
| 10 | ⚠ WARNING | *NEVER perform any repairs or maintenance with the plow controller turned on and the plow plugged into the vehicle harness and the plow attached to the vehicle. Failure to comply could result in death or serious injury.* |
| 11 | ⚠ WARNING | *The vehicle must not be operated when overloaded. In all cases, the loaded vehicle weight, including the entire snow plow system, all aftermarket accessories, driver, passenger, options, nominal fluid levels, and cargo must not exceed the front/rear Gross Axle Weight Rating (GAWR), and total Gross Vehicle Weight Rating (GVWR). These weights ratings are specified on the safety compliance certification label on the driver's side door opening. The use of rear ballast weight may be required to prevent exceeding the front GAWR. Failure to comply could result in death or serious injury.* |
| 12 | ⚠ WARNING | *Read the Meyer Plow Owner's Manual before operating or servicing a snow plow.* **FOLLOW THESE INSTRUCTIONS EXPLICITLY.** *Failure to comply could result in death or serious injury.* |
| 13 | ⚠ WARNING | **SAFETY PRECAUTIONS** *should be used when Hydraulic Unit is in OPERATION and plow is in a RAISED position. Lower plow to ground when vehicle is PARKED in case of hydraulic failure. Failure to comply could result in death or serious injury.* |
| 14 | ⚠ WARNING | *Remove Plow Assembly before placing vehicle on hoist/lift. Failure to comply could result in death or serious injury.* |
| 15 | ⚠ WARNING | *Do not exceed 40 mph transporting plow. Do not exceed 20 mph plowing snow. Know your road conditions at all times. Keep feet clear of moldboard at all times. Failure to comply could result in death or serious injury.* |

# Safety Definitions & Warnings

| | | |
|---|---|---|
| 16 | ⚠ WARNING | **SAFETY PRECAUTIONS** *should be used when Hydraulic Unit is SERVICED. Hydraulic fluid under pressure can cause skin injection injury. If you are injured by hydraulic fluid, get medical attention immediately. Failure to comply could result in death or serious injury.* |
| 17 | ⚠ WARNING | *Vehicle exhaust contains lethal fumes. Breathing these fumes, even in low concentrations, can cause death. Never operate vehicle in an enclosed area without venting the exhaust to the outside. Failure to comply could result in death or serious injury.* |
| 18 | ⚠ WARNING | *Gasoline is highly flammable and gasoline vapor is explosive. Never smoke while working on vehicle. Keep all open flames away from gasoline tank and lines. Wipe up any spilled gasoline immediately. Failure to comply could result in death or serious injury.* |
| 19 | ⚠ CAUTION | *Flag obstructions that are under snow to prevent damage to product or property. Failure to comply may result in minor or moderate injury.* |
| 20 | CAUTION | *A ballast weight may be required to prevent front GAWR overloading. If required, ballast must be securely attached at least 24 inches behind the rear axle. Failure to comply will result in property damage.* |
| 21 | CAUTION | *Batteries normally produce explosive gases which can cause personal injury. Therefore, do not allow flames, sparks or lit tobacco to come near the battery. When charging or working near a battery, always cover your face and protect your eyes, and also provide ventilation. Batteries contain sulfuric acid which burns skin, eyes and clothing. Failure to comply will result in property damage.* |
| 22 | CAUTION | *See your Meyer plow Authorized Distributor/Web site for specific vehicle application recommendations before installation. Failure to comply will result in property damage.* |
| 23 | CAUTION | *Installation of a snow plow may affect your new vehicle warranty. For more information consult your Vehicle Owner's Manual / Vehicle Dealer. Failure to comply will result in property damage.* |
| 24 | CAUTION | *Warranty does not apply to a Meyer plow product which has been negligently or improperly assembled or installed. Failure to comply will result in property damage.* |
| 25 | CAUTION | **CAUTION:** *To avoid harm to vehicles electrical system always disconnect battery before beginning installation.* **DO NOT BURN** *holes or* **WELD** *vehicle frame. This may cause frame failure. Failure to comply will result in property damage.* |
| 26 | CAUTION | *A driver's first responsibility is the safe operation of the vehicle and snow plow. The most important thing you can do to prevent a crash is to avoid distractions and pay attention to the road. Wait until it is safe to operate mobile communication equipment such as cell phones, two way radios, etc. Failure to comply will result in property damage.* |
| 27 | CAUTION | *Front end wheel alignment and headlight aim may require readjustment after installation of equipment, and is the responsibility of the equipment installer. Failure to adjust front wheel alignment may cause premature uneven tire wear. If required, reset to chassis manufacture's specifications. Failure to comply will result in property damage.* |
| 28 | CAUTION | *The Meyer Products' electrical and hydraulic system contains several automotive style fuses. If a problem should occur and fuse replacement is necessary, the replacement fuse must be of the same type and amperage rating as the original. Installing a fuse with a higher rating can damage the system and could cause a fire.* |

## SAFETY DEFINITIONS

⚠

This is the safety alert symbol. It is used to alert you to potential personal injury hazards. Obey all safety messages that follow this symbol to avoid possible injury or death.

**⚠ DANGER**

**DANGER** Indicates an imminently hazardous situation which, if not avoided, will result in death or serious injury.

**⚠ WARNING**

**WARNING** Indicates a potentially hazardous situation which, if not avoided, could result in death or serious injury.

**⚠ CAUTION**

**CAUTION** Indicates an potentially hazardous situation which, if not avoided, may result in minor or moderate injury.

**CAUTION**

**CAUTION** used without the safety alert symbol indicates a potentially hazardous situation which, if not avoided, will result in property damage.

# Introduction

Snow, despite the beauty it may impart to a bleak winter landscape, poses the dual threat of inconvenience and danger. The environmental conditions associated with snow, not to mention the health hazards and economic loss it may impose, seriously endanger thousands of lives annually. Business and industry suffer, and millions of snowbelt residents may be affected by a single snowstorm.

**Meyer Products LLC has published this manual to help you get maximum performance from your Meyer Snow Plow and familiarize you with the features designed for efficiency and safety; be sure you recognize and understand them. Follow recommended operation and maintenance instructions, so when the storm hits, your Meyer Snow Plow will be ready and you will know how to plow like a pro.**

**DO NOT EQUIP ANY VEHICLE WITH A SNOW PLOW WITHOUT CONSULTING MANUFACTURERS' RECOMMENDATIONS.**

Vehicles with Meyer Snow Plows installed may be so equipped as to meet vehicle manufacturers' specifications and recommended options for snow plowing use. **Most vehicle manufacturers insist that vehicles which are to be used for snow plowing be equipped with certain options and accessories, and it is so stated in vehicle manufacturer specifications for snow plow application.**

WARNING: Deployment of an air bag while using a Meyer Snow Plow will not be covered under Meyer Products' warranty. We also recommend that, for optimum performance, vehicles used for snow plowing be equipped with:

- Four-Wheel Drive
- Minimum 60 Amp Alternator or larger
- Minimum 70 Amp Battery or larger (550 C.C.A.)
- Mud and Snow Tires
- Increased Radiator Cooling
- Automatic Transmission
- Power Brakes
- Power Steering

Under the continuing Meyer Product Improvement Plan, Meyer Products LLC reserves the right to change design details and construction without prior notice and without incurring any obligation.

# EC Declaration of Conformity

***CE DECLARATION OF CONFORMITY***

*The undersigned representing the manufacturer*

*Meyer Products LLC*

*18513 Euclid Ave*

*Cleveland, OH 44112*

*and the authorized representative established within the community*

*herewith declared that product: Drive Pro / Lot Pro / Road Pro / Diamond Edge / Super-V / Super-V2 / Path Pro / Path Pro 2 / Power Box*

*Model/Type ref:*

*is in conformity with the Essential requirements of the following EC Directives when subject to correct installation, maintenance, and use conforming to its (their) intended purpose, to the applicable regulations and standards, to our operation and maintenance manual.*

| | |
|---|---|
| *2006/95/EC* | *EC Low Voltage Directive* |
| *2004/108/EC* | *EMC Directive* |
| *2006/42/EC* | *Machinery Directive* |

*and that the Standards and/or technical specifications referenced below have been applied:*

*x* BS EN 60204-1:2006/ IEC 60204-1:2005: Safety of machinery-Electrical equipment of machines-Part1 General requirements.

*x* EN ISO 12100-1:2003: Safety of Machinery-Basic Concepts, General Principles of Design Part 1: Basic Terminology and Methodology

*x* EN ISO 12100-2:2003: Safety of Machinery-Basic Concepts, General Principles of Design Part 2: Technical Principles

*x* EN 13021:2003+A1-Winter service machines- Safety requirements

*x* EN 61000-6-2:2005. Generic standards-Immunity for Industrial Environments.

*x* EN 61000-6-4:2005. Generic emission standard, Part 2: Industrial environment.

*Year of CE Marking:*

| *Manufacturer:* | *Authorized Representative in the community:* |
|---|---|
| *Signature:* | *Signature:* |
| *Position:* Enginering Manager | *Position:* |
| *Date:* 4-7-2016 | *Date:* |
| *Place:* Cleveland, Ohio | *Place:* |

# Drive Pro Component Identification

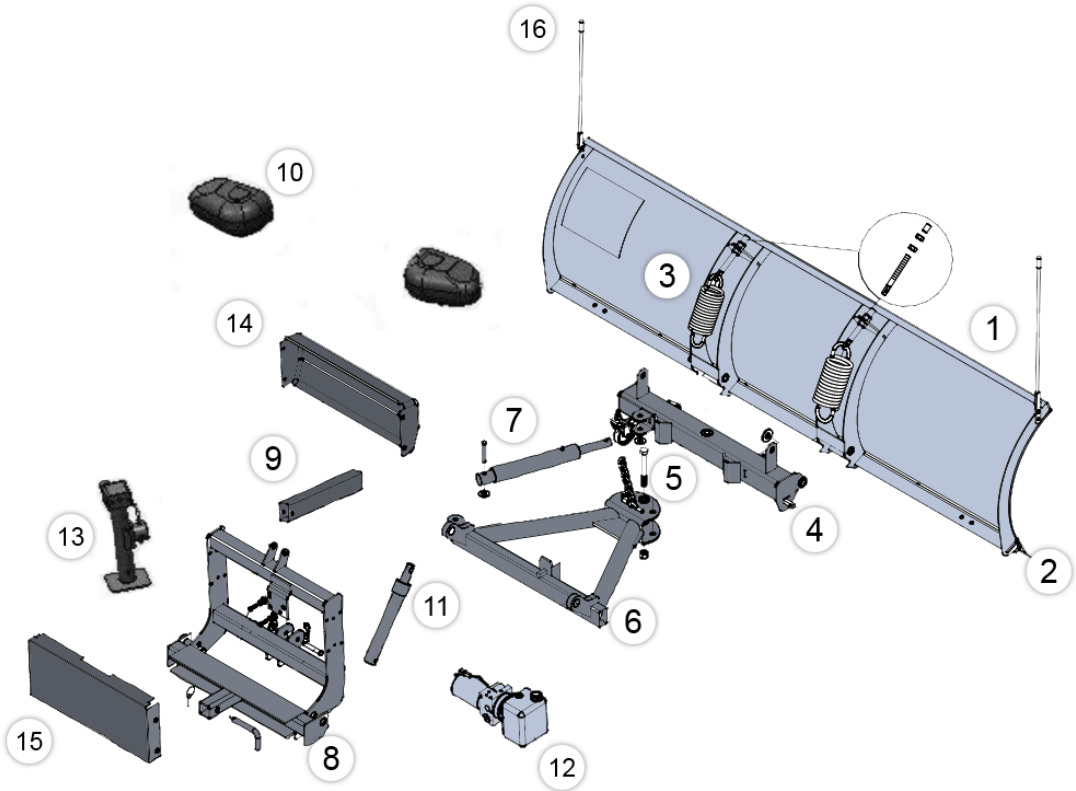

# Drive Pro Component Identification

**1. Moldboard** – Steel or Polyethylene moldboard sheet is impact and corrosion resistant.

**2. Cutting Edge** – Replaceable high carbon steel provides extra long operating life; should be 1/2" above ground in plowing position. (Can be higher when used on gravel driveways.) Available in Urethane or Rubber.

**3. Trip Springs** – Allow moldboard to trip forward and ride over obstructions, this protects the snow plow, vehicle, and operator.

**4. Pivot Bar** – Heavy-duty highway plow design provides durability with three push/connect points to the moldboard.

**5. King Bolt** – Heavy-duty high grade bolt that attaches A-Frame to the Pivot Bar.

**6. A-Frame** – Designed to attach the snow plow to the vehicle, to pivot moldboard for angle plowing, and to hold plow at proper distance in front of vehicle.

**7. Power Angling Cylinders** – Heavy-duty winter specified hydraulics to move the plow left or right.

**8. Mounting Frame** – Custom mount designed to fit the plow system to your vehicle.

**9. Lift Frame** – Allows for fast, complete removal of front end hardware, snow plow, lights and hydraulic unit in one complete module.

**10. Meyer Nite Saber®/Nite Saber II® Snow Plow Lights** – Complies with the Federal Motor Vehicle Safety Standards.

**11 & 12. Hydraulic Power Unit and Lift Cylinder** – Operates snow plow hydraulically-raises, lowers, angles, holds and floats moldboard in plowing position.

**13. Crankstand** – Positions Moldboard and Lift Frame for easy attaching and detaching. Adjusts plow height in varying ground conditions for easy mount/dismount.

**14 & 15. Hydraulic Cover** - Protects the Hydraulic Power Unit from debris and elements.

**16. Plow Markers** – Attach to corner of moldboard providing line of site to the operator.

# Controller 23047

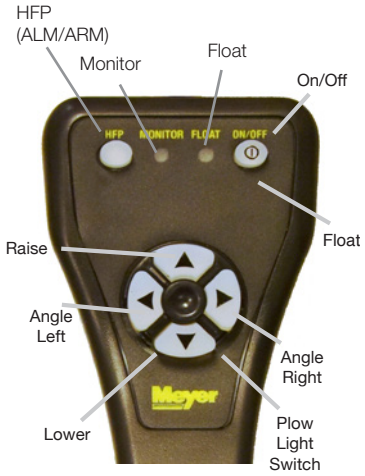


*The snow plow should only be in operation when the vehicle ignition switch and the control switch are in the "ON" position. Care should be taken to insure that the control switch is kept dry and free from moisture during normal operation. When operating the snow plow lights the vehicle headlight switch must be turned to the park position so the vehicle headlights and snow plow lights are not on at the same time.*

*By tapping the ON/OFF pad once, it will turn ON the snow plow lights low beam only. The plow will be OFF. The ON/OFF pad will illuminate AMBER. By tapping the ON/OFF pad again, it will turn OFF the plow lights and the pad illumination. When the ON/OFF pad is continuously depressed for more than 1 second, it will turn ON the plow control switch and the snow plow lights low beam. Tapping the ON/OFF button again will turn on the high beams of the snow plow lights and the monitor light will turn green to show the plow lights are in the high beam position. The ON/OFF button , when tapped, will toggle between low and high beam for the plow lights. Note that the plow lights will not turn on if the vehicle's headlights are on.*

*The Controller pads will illuminate GREEN showing the location of the individual touch pads for the functions of the snow plow Up, Angle Left, Angle Right, and Down. By continuously depressing the ON/OFF pad a second time for more than 1 second, it will turn OFF the plow control switch, snow plow lights and the GREEN pad illumination.*

*Lowering of the snow plow an inch at a time is possible by tapping the down arrow in short intervals. Holding down the down arrow will activate a float light located in the upper right corner of the control switch. This light indicates the snow plow is now in the Lower/Float position. In this position the snow plow will be able to follow the contour of the road and the snow plow can also be angled to the left or right. Touching the up arrow automatically cancels the Lower/Float position.*

*While angling left or right or raising the snow plow if the button is pressed for more than six seconds the operation will be cancelled. This feature eliminates unnecessary amp draw from the vehicle charging system.*

*By double tapping the Up, Angle Left, Angle Right, or Down arrows quickly, the control switch will automatically move the plow to the maximum desired position then stop.*

*Hands-Free Plowing or ALM/ARM*
*Meyer re-branded the ALM/ARM feature on its 23047 controllers to be Hands-Free Plowing (HFP) ™. When activated, the Hands-Free Plowing (HFP) mode uses the vehicle's shift lever to control the up/down movement of the moldboard. Pressing the HFP button on the controller will toggle you through: On/Off, Back-drag Mode (default mode when active), and Forward Plowing Mode.*

*Back-dragging Mode or ALM*
*When the controller is on and you are in the conventional plow control mode, pressing the HFP button will activate Hands-Free Plowing (HFP). The default mode for HFP is the Back-drag Mode. In the Back-drag Mode, the moldboard will automatically lower when you put the vehicle in reverse. Put the vehicle in drive to automatically raise the moldboard.*

*Forward Plowing Mode or ARM*
*To activate the Forward Plowing Mode when HFP is already on, press the HFP button once. The moldboard will automatically lower when you put the truck into drive. When you reach the end of a run, the moldboard will automatically raise when you put the vehicle in reverse.*
*To turn the HFP feature off, press the HFP button until you see the HFP light go off.*

*This switch is self diagnosing. The monitor light is located in the upper left corner next to the float light of the control switch. When the monitor light turns on and begins to flash the control switch is sensing a problem with a specific coil/connection on the hydraulic unit. The label below is on the back side of your control switch.*

*Reset is accomplished by turning off the ignition switch or by turning the power switch off momentarily and then back on. If the monitor light is still illuminated after attempts to reset the switch have failed, contact your nearest authorized Meyer Distributor for repairs.*

Imprinted on backside of Controller

| Systems Monitor<br>LED Read-Out Light Flashes Check Coil (wire Color) |
|---|
| Continuous Light----Motor Solenoid<br>1 Light Flash----Red<br>2 Light Flashes----Black<br>3 Light Flashes----Green<br>4 Light Flashes----Yellow<br>5 Light Flashes----Lt. Blue<br>6 Light Flashes----Purple |

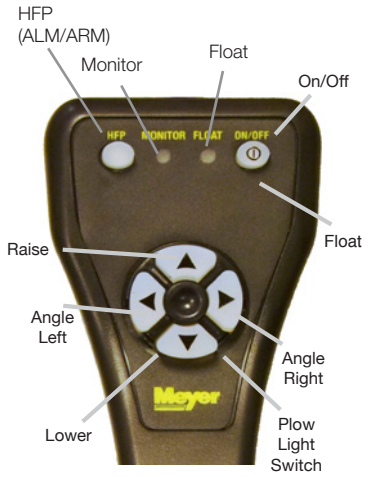

# 2" Receiver Mounting System – Dismount/OFF

1. Press down button until Float light turns Blue/on.

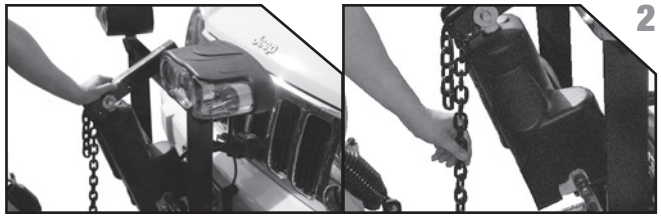


2. Push lift arm down until there is a little slack in the chain.

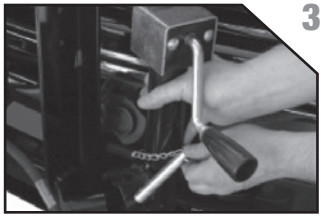


3. Remove crankstand from lift frame.

4. Attach crankstand to a-frame..

5. Adjust crankstand until crankstand comes into contact with the ground and then turn 1 to 2 revolutions.

7. Disconnect both electrical plugs and install weather cover on both ends.

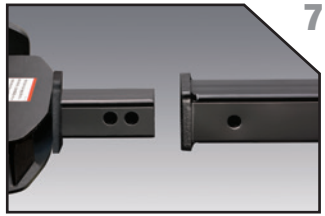


8. Pull the pin from the receiver hitch to unclock the mount and back the vehicle away from the plow.



**SAFETY PRECAUTIONS** - See pages 2-3 for definitions

DANGER 6 | WARNING | CAUTION | CAUTION 27

# 2" Receiver Mounting System – Mount/On

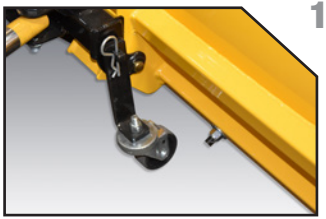


1. Push the plow towards the vehicle using the wheels.

2. Align the 2" receiver and mount the plow using the pin to lock it in place.

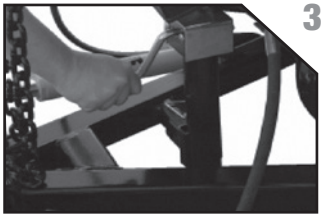


3. Adjust crankstand until until it is no longer in contact with the ground.

4. Remove crankstand from a-frame.

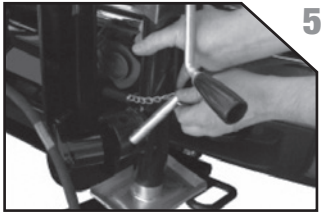


5. Attach crankstand to lift frame.

6. Remove weather covers and connect both electrical plugs.

# E-73 HYDRAULIC COMPONENT IDENTIFICATION

Key:

A: Filler Hole & Relief Valve
B: “B” Solenoid (Red)
C: Left Angle Cylinder Connection
D: Right Angle Cylinder Connection
E: “C” Solenoid (Green)
F: “A” Solenoid (Black)
G: Crossover Relief Valve
H: Lift Cylinder Connection
I: “B” Check Valve
J: Drain Plug
K: Motor Solenoid
L: Drop Speed Adjustment

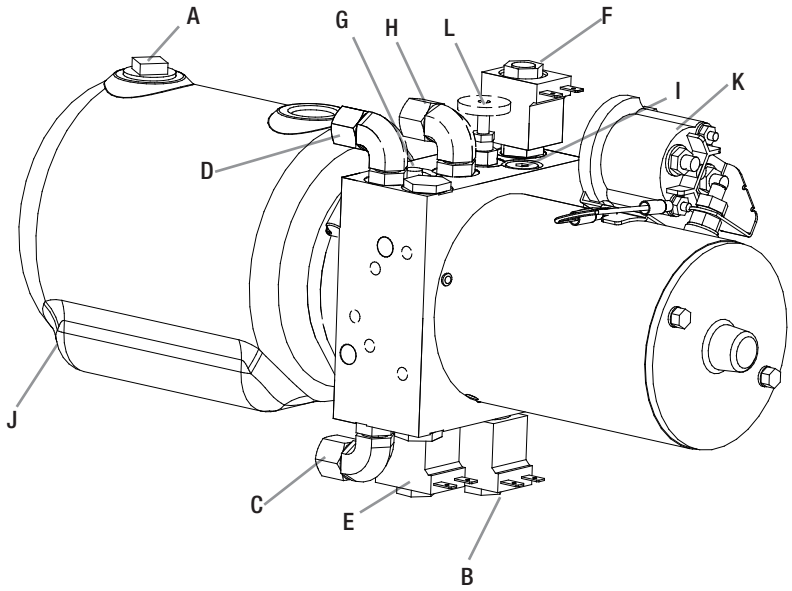

# E-73 Hydraulics – Testing Tips

Before any troubleshooting is started, make certain the following conditions are met.

1. The moldboard is pointing straight ahead. If the unit is disabled, this can often be done by connecting the hose from the left cylinder into the right cylinder and pushing the snow plow by hand.
2. Check to ensure the power angling cylinders are installed correctly.
3. The solenoid coils must be on their proper valve: the “C”- coil (green and white wire), the “B”-coil (red and white wire) and the “A” coil (black and white wire).
4. The electrical installation must have been made according to installation instructions supplied by Meyer Products LLC.

**TESTING**

Many tests do not require removing the Power Unit from the vehicle. However, more thorough testing can be done by using the Meyer Test Stand (available at Authorized Servicing Dealers) which allows direct pressure and Amperage readings.

1. Use a screwdriver or other small tool to check for magnetism of solenoid coils “A”, “B” & “C”. Place the tool on the side of the coil and have an assistant operate the switch. You should feel magnetic attraction.
2. Use a test light or volt meter to determine whether there is power at harness or switches. (The wire must be probed)
3. When determining Amp draw of motor, always obtain the highest value possible, i.e., at maximum raise or angle with motor running.
4. Proper rotation for motor is indicated by an arrow on the top of the pump.
5. The pump shaft (all models) of a good pump can be turned smoothly using two fingers. If it cannot be turned easily, the pump is too tight and must be replaced.
6. Pump pressure can be measured at an angle hose (note pressure at full angle) or in the pressure filter port (an adapter is necessary for the filter port).
7. If hydraulic system is contaminated with oil or a substance other than Meyer Hydraulic Fluid, it is recommended that the hydraulic unit, power angling rams and hoses be drained and flushed clean with Meyer M-2 Flush Fluid. The system should then be refilled with Meyer M-1 Fluid.

| | Raise | Lower | Angle Right | Angle Left | |
|---|---|---|---|---|---|
| MOTOR | X | | X | X | MOTOR |
| A | | X | | | A |
| B | X | | | | B |
| C | | | X | | C |

# E-73 Hydraulics Troubleshooting Guide

**These charts are intended to be used as an aid in diagnosing Meyer Hydraulic Power Units. They are not a substitute for factory training and experience. Be certain to read the General Information and Testing Tips sections before attempting any troubleshooting. Additional detailed information as well as all electrical schematics may be found in Service Manuals @ www.MeyerProducts.com.**

| CONDITION | POSSIBLE CAUSE | CORRECTION |
|---|---|---|
| *Plow does not lift or lifts slowly - motor operates* | 1. Low hydraulic fluid level.<br>2. Discharged battery.<br>3. Leaking or open “A” cartridge.<br>4. No current to “B” coil. (red and white or black wire)<br>5. Inoperative “B” coil. (red and white or black wire)<br>6. Malfunctioning motor.<br>7. Malfunctioning pump. | 1. Add fluid to proper level<br>2. Recharge battery.<br>3. Clean or replace “A” cartridge.<br>4. Locate malfunction and repair.<br>5. Replace “B” coil. (red and white or black wire)<br>6. Repair or replace motor.<br>7. Replace pump. |
| *Plow does not angle right - motor operates* | 1. Improper coupler arrangement.<br>2. Mechanical bind or interference.<br>3. Malfunctioning coupler. (if equipped)<br>4. No current to “C” coil. (green and white or black wire)<br>5. Inoperative “C” coil. (green and white or black wire)<br>6. Inoperative “C” cartridge.<br>7. Leaking crossover relief valve. | 1. Engage coupler properly.<br>2. Eliminate mechanical bind or interference.<br>3. Repair or replace coupler.<br>4. Locate malfunction and repair.<br>5. Replace “C” coil. (green and white or black wire)<br>6. Clean or replace “C” cartridge.<br>7. Replace crossover relief valve. |
| *Plow does not angle left - motor operates* | 1. Improper coupler arrangement.<br>2. Mechanical bind or interference.<br>3. Malfunctioning coupler. (if equipped)<br>4. Leaking crossover relief valve. | 1. Engage coupler properly.<br>2. Eliminate mechanical bind or interference.<br>3. Repair or replace coupler.<br>4. Replace crossover relief valve. |
| *Plow does not angle - motor operates* | 1. Improper coupler arrangement.<br>2. Mechanical bind or interference.<br>3. Leaking crossover relief valve. | 1. Engage coupler properly.<br>2. Eliminate mechanical bind or interference.<br>3. Replace crossover relief valve. |

For questions please contact www.meyerproducts.com, or call 216-486-1313.

# E-73 Hydraulics Troubleshooting Guide

**These charts are intended to be used as an aid in diagnosing Meyer Hydraulic Power Units. They are not a substitute for factory training and experience. Be certain to read the General Information and Testing Tips sections before attempting any troubleshooting. Additional detailed information as well as all electrical schematics may be found @ www.MeyerProducts.com.**

| CONDITION | POSSIBLE CAUSE | CORRECTION |
|---|---|---|
| *Plow will not hold in angled position* | 1. Air in cylinders and hoses.<br>2. Leaking dual pilot check valve.<br>3. Leaking crossover relief valve.<br>4. Crossover relief valve opening at too low a pressure. | 1. Bleed cylinders and hoses.<br>2. Replace pilot check valve.<br>3. Replace crossover relief valve.<br>4. Replace crossover relief valve. |
| *Motor does not operate* | 1. Discharged or defective battery.<br>2. Loose/corroded electrical connections.<br>3. Inoperative starter solenoid.<br>4. Malfunctioning control switch.<br>5. Malfunctioning motor. | 1. Recharge or replace battery.<br>2. Clean and tighten electrical connections.<br>3. Replace starter solenoid.<br>4. Replace control switch.<br>5. Repair or replace motor. |
| *Plow does not lower* | 1. No current to “A” coil. (black and white or black wire)<br>2. “A” cartridge jammed in closed position.<br>3. Inoperative “A” coil. (black and white or black wire) | 1. Locate malfunction and repair.<br>2. Clean or replace “A” cartridge.<br>3. Replace “A” coil. (black and white or black wire) |
| *Plow creeps down* | 1. Leaking “A” cartridge.<br>2. Leaking “A” cartridge O-ring.<br>3. Leaking “B” check valve.<br>4. Leaking Ram Packing Cup.<br>5. Leaking O-ring at bottom of lift cylinder. | 1. Clean or replace “A” cartridge.<br>2. Replace O-ring.<br>3. Clean or replace “B” check valve.<br>4. Replace Ram Packing Cup.<br>5. Replace O-ring. |

For questions please contact www.meyerproducts.com, or call 216-486-1313.

# General Maintenance –Drive Pro

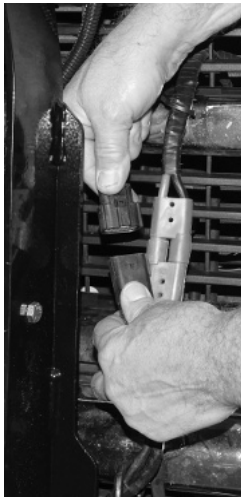

All electrical connections cleaned and add dielectric grease once/month

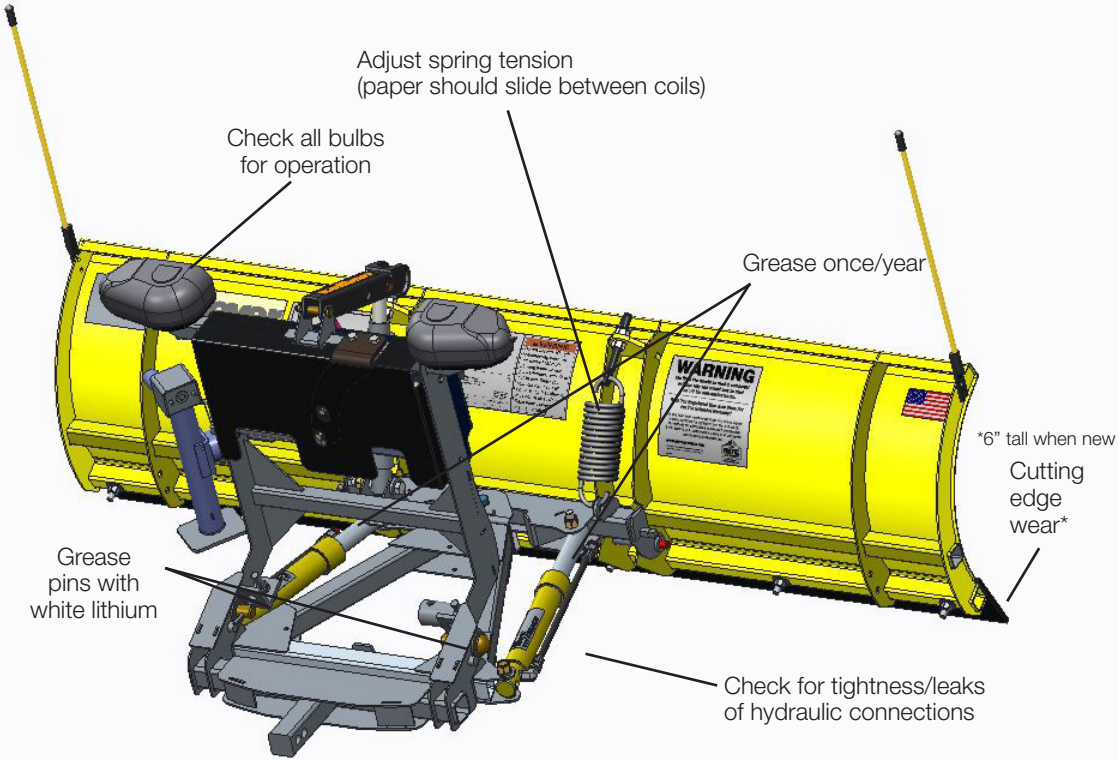


***See pages 17-21 for more detailed explanation of maintenance steps***



**SAFETY PRECAUTIONS** - See pages 2-3 for definitions | DANGER | WARNING 6 / 9 / 10 / 12 / 13 / 14 / 16 / 17 / 18 | CAUTION | CAUTION 21 / 27 / 28

# General Maintenance

**Tightening the Trip Spring and Adjusting the Eye Bolt**
To properly adjust the Trip Springs, tighten the top locknut 4 (four) complete rotations beyond the point that the coils begin to separate. Tighten the bottom locknut to hold eyebolt in position. It is important that each eye bolt is locked in this position to work properly when the moldboard experiences tripping action.

**Greasing the Pivot pins and King bolt**
Use a grease gun to grease pivot pins and king bolt.
This will keep your plow operating smoothly.

**Maintaining Cutting Edge and Mounting Bolts**
Monitor the cutting edge of your plow for excessive wear and tear. Replace it as soon as it appears worn on either corner approximately 4". Replacing the cutting edge will prevent damage to the moldboard. Also, check and retighten all mounting bolts after the first plowing session of the season and at regular intervals throughout the season.

**Checking Oil Level**
Use a standard drinking straw or clean stick to check your fluid level. Remove the filler cap and dip the straw into the fluid reservoir. Always check fluid level with the lift piston fully retracted. The fluid level should be 1-1/2" below the filler hole. If your fluid is low or appears excessively dirty, change your hydraulic fluid. Only use (#15134) Meyer Hydraulic M-1 Fluid. Change once per year.

**Monitoring the Condition of Your Hoses, Couplers and Rams**
Check all hoses for bubbles or cuts and couplers for rust or leaks. A failure in a hose or coupler will result in a loss in oil pressure and cause power angling failure. Check rams for rust and leaks, either of these problems can introduce water into your hydraulic system which may cause freeze-ups. If you find any of these problems, replace the damaged parts with Meyer Genuine Parts available from your local authorized retailer.

**Monitoring the Electrical System and Battery Terminal Connections**
For maximum efficiency, the vehicle supporting the plow must be properly serviced. The system should consist of at least a 70-amp/hr battery and a 60-amp alternator. Be sure to regularly check the battery terminals to assure that they're clean and free of corrosion, adding (#15632) dielectric grease to all connections will help prevent corrosion from occurring. Also check the electrical connections to assure they're tight and corrosion free. Make sure that all wires are being held clear from moving or hot engine parts or from sharp sheet metal. For maximum efficiency, the battery, alternator, and regulator must be in top operating condition to assure maximum electrical output.

# General Maintenance

**Adjusting the Drop Speed**
The rate at which the plow is lowered is adjustable. Turning the Lower Adjustment Screw in (clockwise) will decrease the speed at which the plow is lowered by gravity, and turning the screw out (counter-clockwise) will increase the drop speed.

**Adjusting the Runners**
Inspect moldboard runners for wear and replace them as soon as they start to wear through. Adjust the runners to maintain cutting edge height of 1/2" above ground in snow plowing position. Set plow higher when plowing on gravel driveways.

**Storing the Plow and Hydraulic Unit**
After you have disconnected the plow from your vehicle, extend the lift cylinder to end of the stroke and coat the lift rod with light grease. This fills the cylinder with hydraulic fluid and protects the interior and exterior from rust and corrosion. Also coat the exposed portions of the power angling cylinder rods with light grease. Be sure to reconnect the quick couplers at the Power Angling rams and plug in the weather plugs on Hydraulic Unit to keep them clean and to prevent contamination of the system. Coat all pivot pins and other wear points with chassis lubricant. Unplug all electrical connections at the power unit. Coat all connections with a dielectric compound to prevent corrosion and plug them into their corresponding plugs. Unplug the plow lights, use dielectric compound at light connections to prevent corrosion. WARNING: THE LIFT ARM EXTENDS BEYOND THE BUMPER OF THE VEHICLE. TO MINIMIZE DAMAGE IN A FRONT END COLLISION, THE LIFT ARM SHOULD BE REMOVED FROM THE VEHICLE WHEN YOUR SNOWPLOW IS REMOVED. Meyer M-2 Hydra-Flush should be used to flush contaminants from the system. It should also be used for off-season storage.

# Pre-Season Maintenance

Meyer Products LLC recommends this maintenance information for regular service. Sustained heavy operation may call for more frequent service. Snow plowing subjects a vehicle to exceptionally rugged use. As a result, it is very important to inspect and bring the snow plow and vehicle up to maximum operating conditions. ***Inspection should be made of both the vehicle and snowplow prior to the plowing season and after each use.***

**PRE-SEASON MAINTENANCE**

Scheduled vehicle maintenance should be performed as recommended by the manufacturer.

**Don't forget that in addition to keeping equipment in order:**

1. Keep windshield wipers, heaters and lights working.
2. Use emergency flasher lights for increased visibility and safety.
3. Equip vehicles with chains where necessary.
4. Provide operators with protective clothing and with rubber gloves for handling snow melting chemicals.

**VEHICLE ELECTRICAL SYSTEM**

For maximum efficiency, the vehicle supporting the snow plow must be properly serviced. The system should consist of at least a 70 amp./hr. battery and a 60 amp alternator. Be sure to check regularly:

1. Battery terminals to assure they're clean and free of corrosion.
2. Electrical connections, to assure they're tight and corrosion free.
3. Battery must be in top operating condition.
4. Alternator and regulator, to assure maximum electrical output.

***SNOWPLOW CAUTION: ALWAYS LOWER MOLDBOARD TO THE GROUND WHEN SNOW PLOW IS BEING SERVICED OR WHEN VEHICLE IS NOT IN USE.***

Visit www.MeyerProducts.com for a complete list of your plow system maintenance items!

*Protects your electrical system with Meyer winter formula dielectric grease.*

**Visit www.MeyerProducts.com**

Visit www.MeyerProducts.com for a complete list of your plow system maintenance items!

*Yellow and black paint is formulated to withstand harsh temperatures and the winter environment.*

**Visit www.MeyerProducts.com**

# Pre-Season Maintenance

Check the Diagnosis chart and Pre/Post Season Maintenance pages for advice on maintaining the unit.

1. Check and maintain hydraulic fluid reservoir level to Full. Oil level should be checked with lift ram down or retracted position.
2. Check entire hydraulic system for leaks. A significant drop in hydraulic fluid level is evidence of a leak which must be corrected to prevent serious damage.
3. Before and after each season, Grease all pins and lubricate all pivot points with chassis lube.
4. **ADJUSTING TRIP SPRING TENSION** - Tighten top locknut 4 turns beyond the point when spring coils begin to separate. Tighten bottom locknut to hold eye bolt in position as shown
5. **RUNNERS/SHOES**
   A. Inspect moldboard runners for wear and height adjustment.
   B. Always replace runners as soon as they start to wear through.
   C. Adjust the runners to maintain cutting edge height of 1/2" above ground in snow plowing position. (Can be set higher when used on gravel driveways).
6. **CUTTING EDGE - REVERSIBLE ON TRIP EDGE PLOWS** - Replace the cutting edge as soon as it appears worn. This will prevent permanent damage to the plow.
7. **MOUNTING BOLTS** - Retighten all mounting bolts after first snow plowing session and at regular intervals through the season.
8. **SNO-FLO® POWDER COATING**, both black and yellow, should be checked at the beginning and end of each season for any signs of rust. If any exists, use Meyer special Sno-Flo® powder coat touch-up available in spray cans.
9. Check lighting system to make sure all bulbs are functioning: headlights Hi/Low - turn signals.

**NOTE: PROTECTION AGAINST RUST AND CORROSION**
When the power unit is not used for extended periods, **protect the chromed lift rod by fully extending and coating it with chassis lubricant.** Coat the exposed portions of the power angling cylinder rods with chassis lubricant to protect against corrosion.



**SAFETY PRECAUTIONS** - See pages 2-3 for definitions | DANGER | WARNING 6 / 9 / 10 / 12 / 13 / 14 / 16 / 17 / 18 | CAUTION | CAUTION 21 / 27 / 28

# Post-Season Summer Maintenance

1. **Draining & Replacing Meyer M-1 Hydraulic Fluid**
   Drain the fluid by removing the drain plug located on the bottom of unit. To drain the fluid from the power angling cylinders, disconnect the fittings and completely retract the cylinder rods and purge cylinders and hoses of all hydraulic fluid. The complete system should then be flushed out with Meyer M-2 Flushing Fluid before adding new Meyer Hydraulic Fluid.

2. **Meyer M-1 Hydraulic Fluid (#15134)** is specially formulated with an anti-ice additive for almost constant viscosity in subzero temperatures. Because it is free-flowing in extreme cold, the unit's performance and efficiency are not affected by winter weather. It is effective for a maximum of one year. Always carry an extra quart of **Meyer M-1 Hydraulic Fluid**. Use of any inferior fluids will void the Meyer warranty.

3. Refill power unit with **Meyer M-1 Hydraulic Fluid** by fully retracting lift piston and filling reservoir to top. ***Note: Do not over fill unit***, over filling unit will cause oil to squirt out of the reservoir pressure relief valve. Power angling rams should be collapsed. Install Hydraulic unit and Moldboard assembly on vehicle. Remove reservoir pressure relief valve (Filler plug). To bleed air from the system power angle wings side to side while maintaining a constant check on the reservoir fluid level. **Note:** It may be necessary to bleed air from the Power angling cylinders by loosening the hydraulic fittings. Angle plow left and right until you have a steady stream of oil coming out of fitting. Raise and lower the plow several times. With lift ram fully retracted (down) check fluid level and replace filler plug.

Visit www.MeyerProducts.com for a complete list of your plow system maintenance items!

*Meyer M1 Hydraulic oil and Flush is scientifically formulated to withstand extreme winter temps up to -40°F.*

# Snow Plow Storage

Visit www.MeyerProducts.com for a complete list of your plow system maintenance items!

*Optional plow carts make it easy to move your plow during off-season storage.*

1. When snow plow is disconnected, **disconnect lift chains from lift arm and extend lift cylinder to end of stroke and coat chrome rod with light grease.** This fills the cylinder with hydraulic fluid and protects the interior and exterior from rust and corrosion.

2. Whenever Moldboard is disconnected, coat the exposed portions of the power angling cylinder chrome rods with light grease to protect them from corrosion.

3. Coat pivot pin and other wear points with chassis lubricant. Be sure to grease all grease holes.

4. Unplug electrical connection at power unit. Coat connection with a dielectric compound to prevent corrosion and plug into their corresponding weather plug.

5. Reference post season summer maintenance on page 40 prior to final storage.

# Meyer® Snow Plows Limited Warranty

**What is Covered:** Meyer Products, LLC, warrants to the original purchaser of Meyer® brand products that they will be free from defects in materials or workmanship, with the exceptions stated below. No person is authorized to change this warranty or to create any additional warranty on Meyer® products.

**How Long Coverage Lasts:** This warranty runs for a period of two years from the date of purchase on any purchase of a complete Snow Plow Package1. If the Package consists of an E-73 hydraulic unit along with a Pro-series plow (Drive Pro, Lot Pro and Diamond Edge); and is registered online at www.meyerproducts.com within sixty (60) days of purchase, your warranty for the Package will be extended for a period of three years. In addition to the warranties covering a complete Snow Plow Package and Structural Steel, you will receive a warranty for a period of one year from the date of purchase on individual parts, components, or accessories. All foregoing warranties apply only to an original purchaser of the product if the product is installed by an authorized Distributor/Sub-Distributor and terminate if the product is sold or otherwise transferred. Some states do not allow limitations on how long an implied warranty lasts, so the above limitation may not apply to you.

**What is Not Covered:** This warranty does not cover:

- Problems caused by failure to follow the product instructions, failure to maintain the product as described in the Operator's Manual, or failure to maintain proper levels of lubricants;
- Problems caused by contamination or restriction of lubricant systems, or damage resulting from rust, corrosion, freezing or overheating.
- Paint or expendable snowplow parts such as pins, runners, cutting edges, chrome plating, springs and markers.
- Damage to any vehicle to which the products are mounted, or the suitability of any product for vehicles which are not fitted with the appropriate heavy-duty snow plow service preparation parts.
- Damage caused by usage that is not in accordance with product instructions (use of the snow plow for any purpose other than plowing snow is considered misuse and abuse).
- Any snow plow, or any part, component, or assembly thereof, which has been modified or altered.
- Problems caused by using accessories, parts, or components not supplied by Meyer Products.
- Cost of tax, freight, transportation or storage charges, environmental charges, solvents, sealants, lubricants or any other normal shop supplies.
- Problems caused by collision, fire, theft, vandalism, riot, explosion, lightning, earthquake, windstorm, hail, water, flood, or any other Acts of God.
- Liability for damage to property, or injury to, or death of any person arising out of the operation, maintenance or use of the covered product.
- Products with missing or altered serial numbers.

[1]A complete Snow Plow Package consists of the hydraulic motor, operating controller, lift-frame, moldboard and all related items.
[2]Structural elements consist of the mounting, lift-frame, A-frame, sector, and the moldboard.

AMERICA'S BEST WARRANTY 5 YEARS

# Meyer® Snow Plows Limited Warranty

*Meyer offers a complete line of spreaders for any application and vehicle size. Go to www.MeyerProducts.com for more information.*

The original purchaser's sole and exclusive remedy against Meyer Products and its Distributors and Sub-Distributors, and Meyer Products' sole obligation for any and all claims, whether for breach of contract, warranty, tort (including negligence) or otherwise shall be limited to providing, through its authorized Distributor/Sub-Distributor network, all labor and/or parts necessary to correct such defects free of charge. Any cost incurred in returning the product to an authorized Meyer® Distributor/Sub-Distributor is the responsibility of the original purchaser. ALL EXPRESS AND IMPLIED WARRANTIES FOR THE PRODUCT, INCLUDING, WITHOUT LIMITATION, ANY IMPLIED WARRANTIES OF MERCHANTABILITY AND FITNESS FOR A PARTICULAR PURPOSE, ARE LIMITED IN TIME TO THE TERM OF THE LIMITED WARRANTY PERIOD. NO WARRANTIES, WHETHER EXPRESS OR IMPLIED, WILL APPLY AFTER THE LIMITED WARRANTY PERIOD HAS EXPIRED. Meyer Products disclaims liability beyond the remedies provided for in this limited warranty, and disclaims all liability for incidental, consequential, and special damages, including, without limitation, any liability for third-party claims against you for damages, for products not being available for use, or for lost profits. Meyer Products' liability will be no more than the amount you paid for the product that is the subject of a claim; this is the maximum amount for which we are responsible. Some states do not allow the exclusion or limitation of incidental or consequential damages, so the above limitation or exclusion may not apply to you.

**What Meyer Products Will Do:** Meyer Products will repair any product that proves to be defective in materials or workmanship. In the event repair is not possible or practical (as determined by Meyer Products in its sole discretion), Meyer Products will either replace the product with a new product of similar model and price, or refund the full purchase price, as determined by Meyer Products.

**Customer Responsibilities:** Customer must keep the complete Snow Plow Package serviced/maintained as recommended by Meyer Products. A written record of service must be maintained, along with receipts for maintenance materials purchased. A copy of the maintenance record and pertinent receipts may be requested in the event of a claim.

**MEYER PRODUCTS, LLC**
18513 Euclid Avenue
Cleveland, OH 44112

# It pays to keep your Meyer ALL Meyer.

Meyer Genuine Parts are designed to fit properly and perform better and last longer – which means you save money by replacing fewer parts less often. In addition, all Meyer Genuine Parts:

- Comply with Meyer specifications and technical standards
- Maintains the warranty on your original equipment
- Fit perfectly and reduces installation time
- Guarantee original equipment quality

Look for the Meyer name on all your replacement parts.

For more information visit our web site

**www.meyerproducts.com**

# Notes

# Notes

## Meyer Products carries a full line of spreaders and other products including:

### Broadcast Spreaders
If you are looking for a heavy-duty broadcast spreader for all-season use, look no further.

### Tailgate Spreaders
With direct drive motors that help the auger to grind through large chunks of material, jams are a thing of the past.

### Insert Hopper
Featuring an unprecedented ten-year warranty on the virtually indestructible polyethylene hopper, Meyer outlasts virtually every hopper on the market.

### Dump Truck
Getting a good return on your dump truck is important. That's why we make the very best Under Tailgate Spreaders (UTG) and Replaceable Tailgate Spreaders (RTG) available.

### The Big Yellow Box
The Big Yellow Box is perfect for storing rock salt, sand, chemicals, tools or anything you need to keep dry and secure.

### Payload™ Insert Dump
The Payload™ Insert Dump bed is the quickest and easiest way to improve your bottom line and hauling productivity for your ¾ ton+ pick-up truck.

Form#4-562 Part# 90909 0517

**Meyer Products LLC**
**18513 Euclid Avenue**
**Cleveland, OH 44112-1084**
**216-486-1313**
**www.meyerproducts.com**

Dealer Information: